ISP Buffer ... careful, it's brutal out there

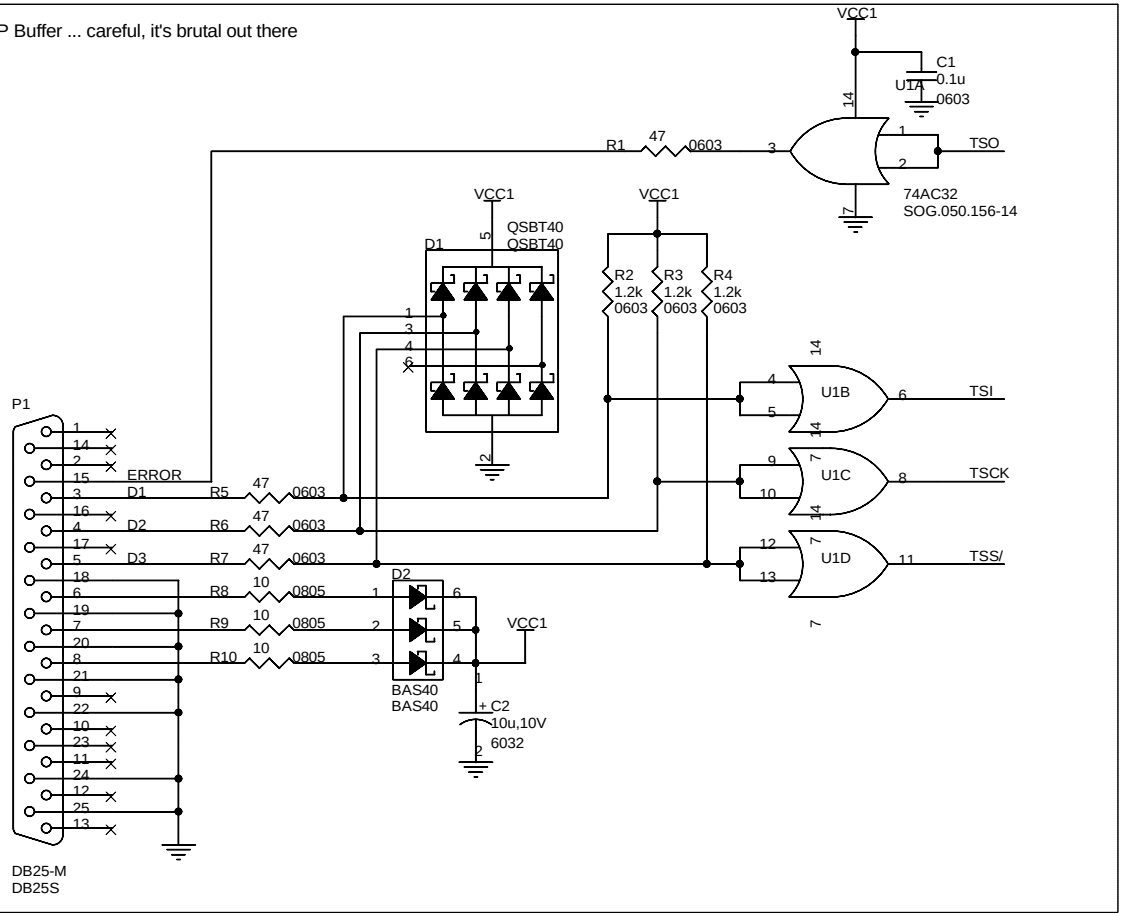

East meets West

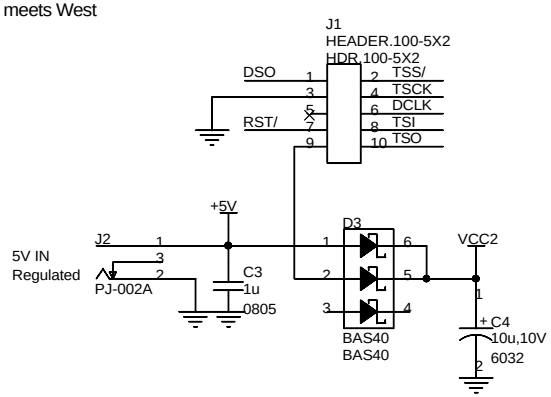

Run-Time Debug Port ... time waits for no man

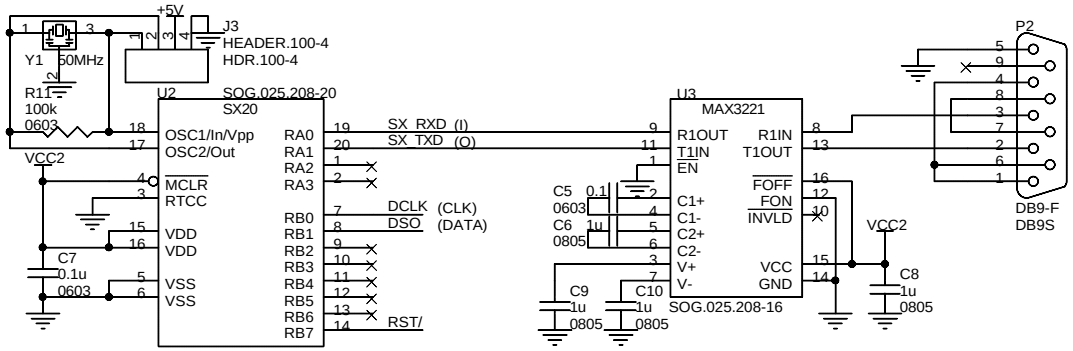

UBICOM

Enabling Ubiquitous Communications

635 Clyde Ave
Mountain View, CA 94043

www.ubicom.com

Root

C:\ORCADDESIGNS\IP2KDONGLE\IP2KDONGLE.DSN

Title: IP2kDongle

Last Modified: Friday, February 01, 2002 | Revision: 1.0

Drawn By: W Poon / A Smolnikov | Size: | Sheet: 1 of 1